NEPTUNE IP68

Perfect for pool lighting and water features



LED LINEAR™

A Fagerhult Group Company

LINEAR
MODULAR
INFINITE

NEPTUNE IP68

SETTING STANDARDS IN UNDERWATER LIGHTING

- The LED Linear™ novelty NEPTUNE sets new standards in underwater lighting – with NEPTUNE you can create atmosphere and individual lighting moods with color changes and dimming.
- The precisely constructed rigid linear luminaire with IP68 protection is ideally suited for the lighting of swimming pools, fountains and water features of all kinds.
- Especially designed for long homogeneous linear light lines to realize decorative or functional lighting within and around the pool area and accentuate the elements of design.

KEY FEATURES

With a minimal cross section of only 16 mm x 16 mm, the dot free luminous lightline NEPTUNE set the scene for every water application. The luminaire housing has a special PVC material composition that is chlorine resistant for continuous immersion under water with a chlorine concentration of up to 5 ppm and even higher resistance during shock treatment.

The lengths are freely configurable (Static White: between 544 mm and 5,044 mm, RGB: between 555 mm and 3,055 mm) in a single piece and in steps in 62.5 mm.

NEPTUNE is submersible up to 1 m (depths down to 5 m are also possible after onsultation with your partner). A chlorine resistant cable and the ultrasonic welded end caps also ensure that water can't ingress.

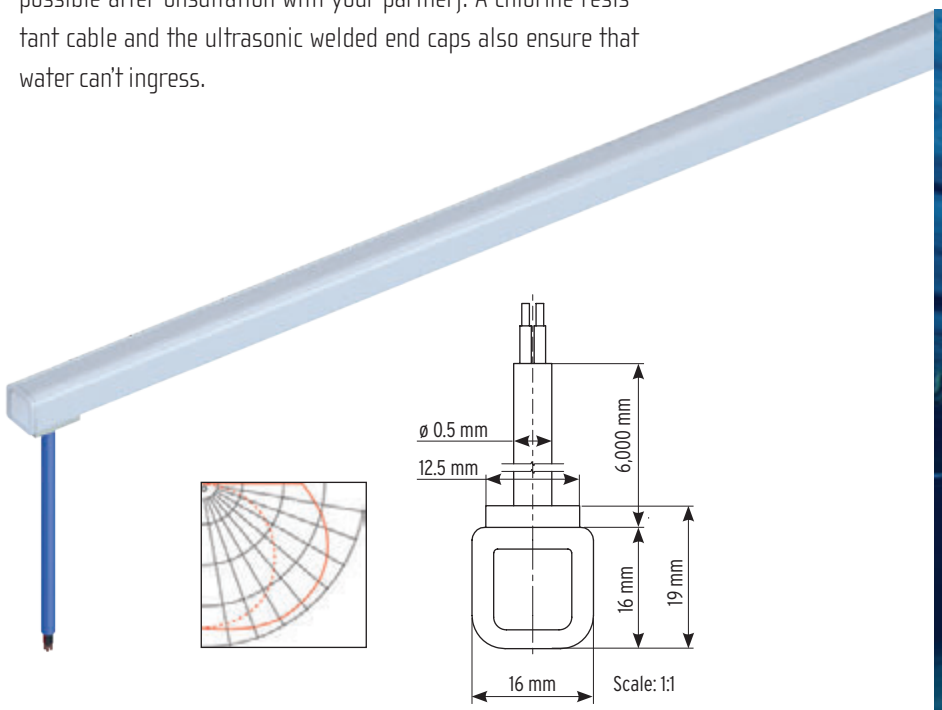

TECHNICAL DATA

- Lumen output & Efficiency
  recessed: from 150 lm/m to 580 lm/m, up to 39 lm/W
  surface mounted: from 165 lm/m to 700 lm/m, up to 50 lm/W
- Color temperature between 2,700 K and 4,000 K
- CRI up to 96
- IP68
- Available in White and RGB
- Lifetime White 50,000 h
- Lifetime RGB 30,000 h

Reel-to-reel (R2R) production

OneBinOnly

CIE S-025 compliant

LM80 compliant

SDCM3

Photometrical code

Protection against permanent submersion under defined conditions

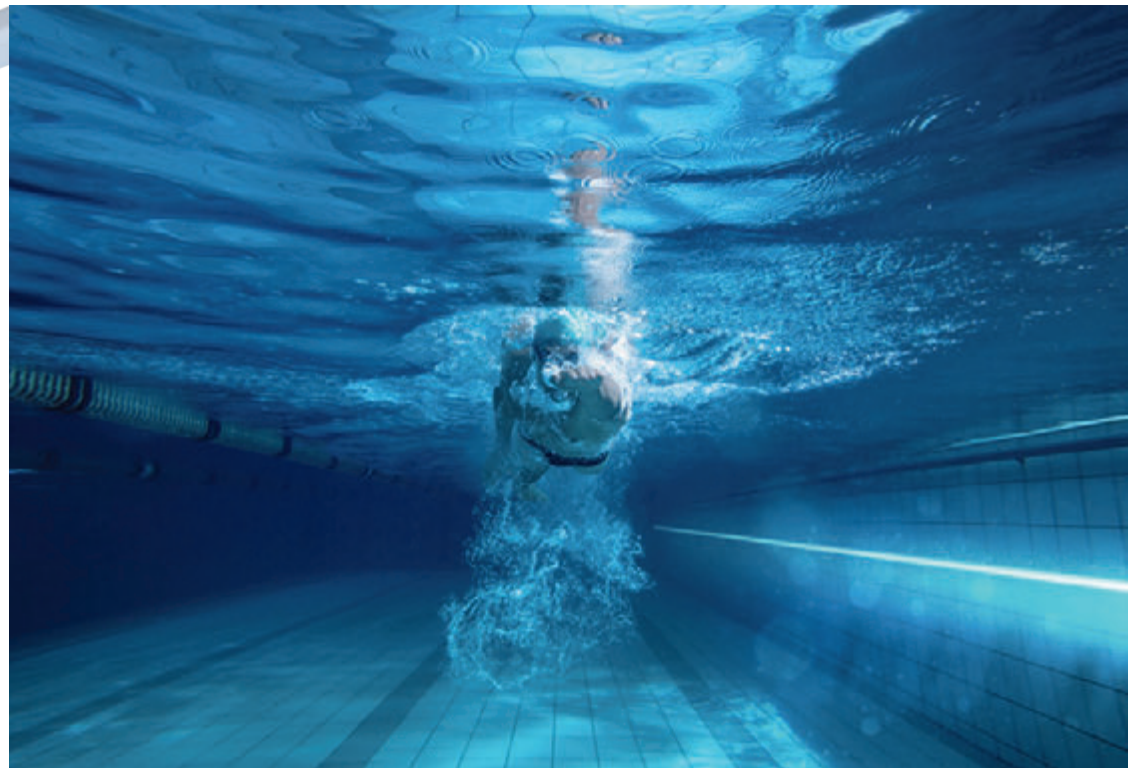

MOUNTING

Surface and recessed mounted



VarioClip TV 30 mm 316L (5 clips required/meter, stainless steel - V4A), Art.-#: 13000050-01



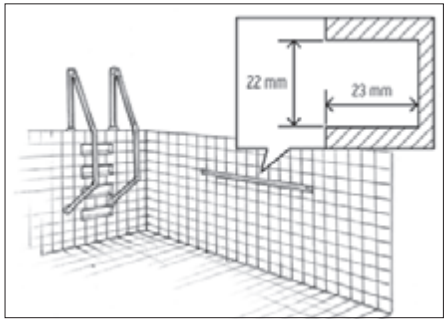

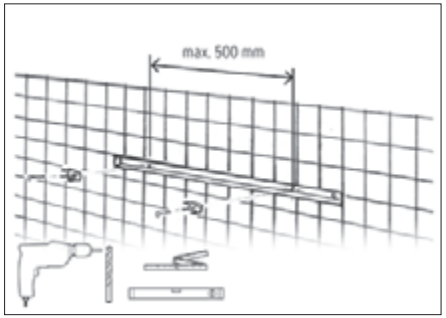

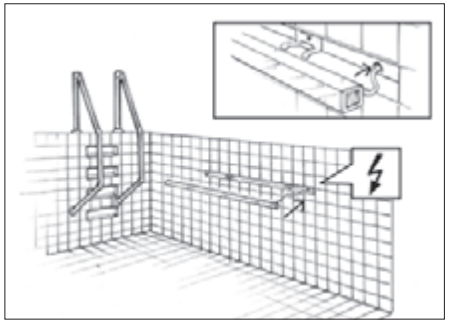

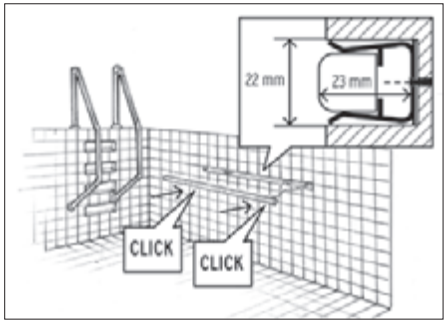

NEPTUNE is easily installed with a V4A stainless steel clip suitable for surface and recessed mounting.

Please see our detailed mounting instructions on the website **www.led-linear.com**

REFERENCES

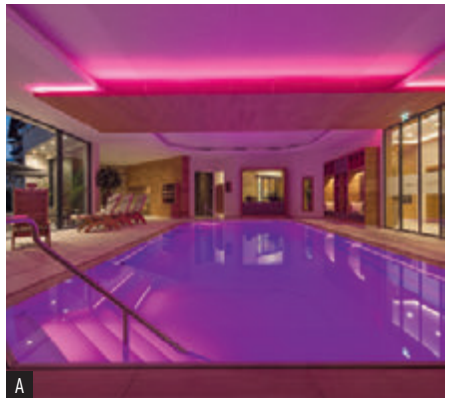

Color coordinated inside and outside the pool

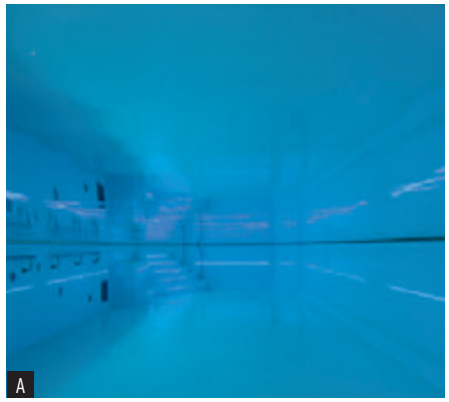

Long straight light lines for every kind of pool



Even perfect for the stairs in the pool



Nice atmosphere in the evening times

Photos

A | Hotel u. Gasthof Grünauerhof, Austria

B | Romantic Hotel Fischerwiege, Baltic Sea

C | Bluewaters, Dubai

LED LINEAR™

A Fagerhult Group Company

Please scan the QR Code for
more detailed information
about NEPTUNE IP68

LED Linear™ GmbH
Dr. Alfred-Herrhausen-Allee 20
47228 Duisburg
Germany
Phone +49 2065 94322-100
Fax +49 2065 94322-120
Info@led-linear.com

www.led-linear.com

Art.-#: 3300036-ENG · Edition 06/2021 · All rights reserved. Subject to change.